DESIGN DATA
LEAKAGE TEST PRESSURE: 2500 mm WG
CLASSIFICATION: BV

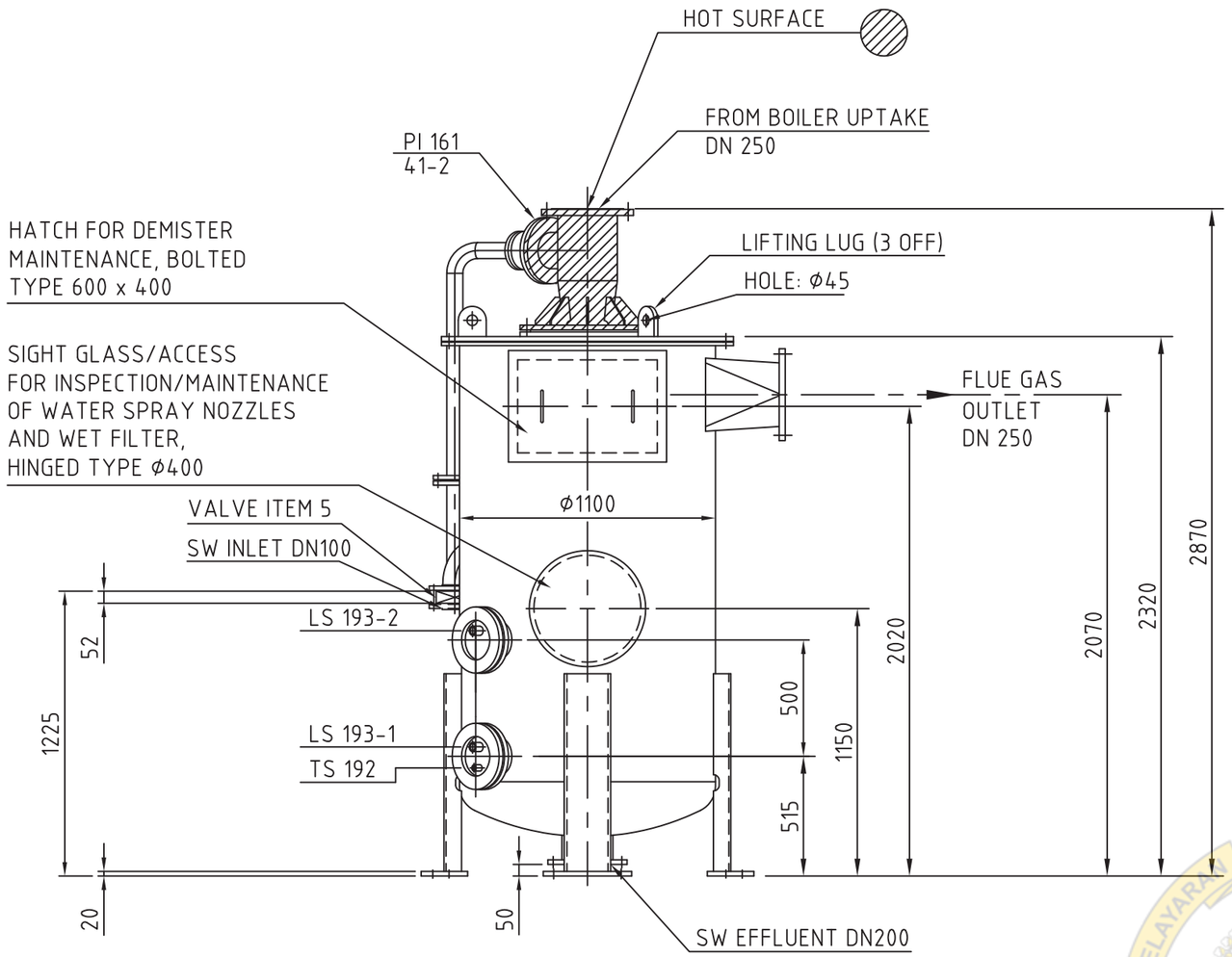

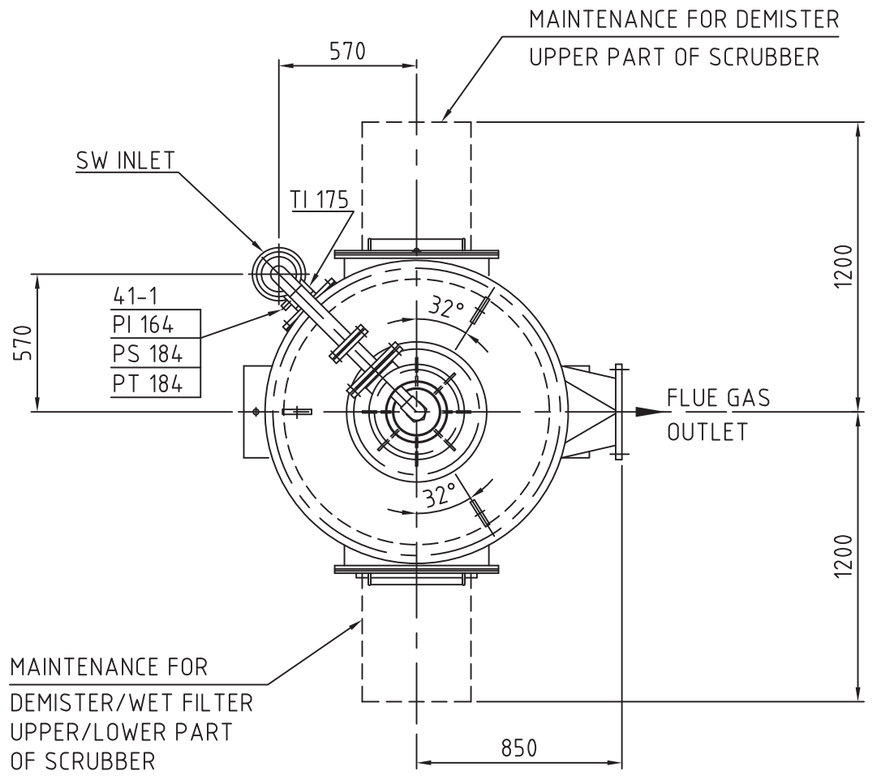

NOTES:

SURFACE TREATMENT

MATERIALS IN MILD STEEL:

INTERNAL: SANDBLASTING TO SA 2,5

COATING:

1 ONE COAT PRIMER
1 TWO COATS GLASS FLAKE REINFORCED EPOXY
TOTAL DRY FILM THICKNESS 600-800 MICRONS

EXTERNAL: SANDBLASTING TO SA 2,5

COATING:

1 COAT TWO PACK EPOXY: 75 MICRONS
1 COAT ALKYD TOP COAT: 50 MICRONS
COLOUR: RAL 9002

ALL FLANGE CONNECTIONS IN ACCORDANCE
WITH DIN STANDARD PN10

LADDERS AND SAFETY RAILS RECOMMENDED
DURING MAINTENANCE OR REPAIR WORK INVOLVING
WORKING HEIGHT ABOVE 2M.
THIS IS NOT PART OF STANDARD DELIVERY.

DRY WEIGHT: APPROX. 1300 Kg

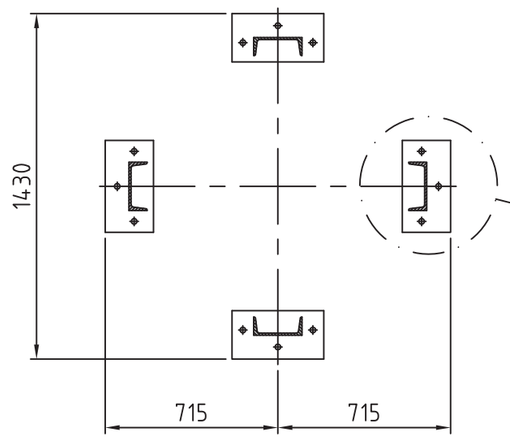

FOUNDATION PLAN

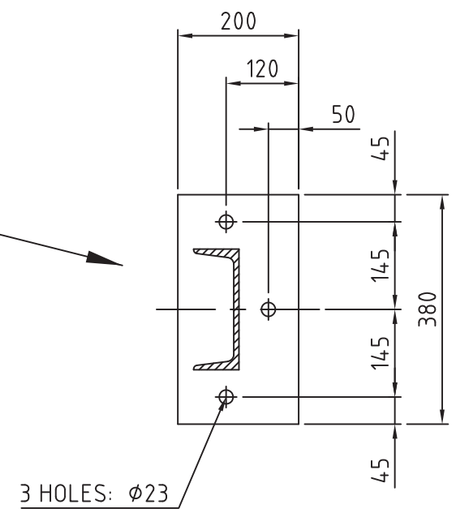

Ordre nr. Order No.	Besteller Purchaser	NEW TIMES S.Y Hull No.	Uts.sign. Issuer sign.
131611		NEW TIMES S.Y Hull No. 0305004	TW
131610		NEW TIMES S.Y Hull No. 0305003	TW
131609		NEW TIMES S.Y Hull No. 0305002	TW
131608		NEW TIMES S.Y Hull No. 0305001	TW

Gruppe nr. / Group No. 9000

This drawing and the know-how embodied in it are our property and must not, without our written permission, be copied or made available to others. The receiver is responsible for every misuse.

Rev.	Dato Sign.	Forandringer / Revisions
00	20140626/TW	RELEASE DRAWING

Dato / Date	Tegnet / Drawn	Tracet / Traced	Skala / Scale
20140626	RQ	BL	1:25
	Kontr. / Checked: RH	Godkj. / App'd.: TW	

Proj.metode / Proj.method

MOSS INERT GAS SYSTEM

Title: FLUE GAS SYSTEM
SCRUBBER UNIT
ARRANGEMENT
ITEM 253

SIZE; 4.900 Nm3/h

WÄRTSILÄ — Wärtsilä Moss AS

Erstn. for / Replaces | Erstattet av / Replaced by

131608-051-01 | Rev. 00

Side / Sheet 1 av / of 1 sider / sheets | Format A2